easicook.co.uk

Spare Parts Manual

Leading UK Distributors of Catering Equipment Since 1977

Sales - Repairs - Spares

Tel: 029 20747567
Fax: 029 20214100
Email: info@easicook.co.uk

Click Here for Live Online Chat

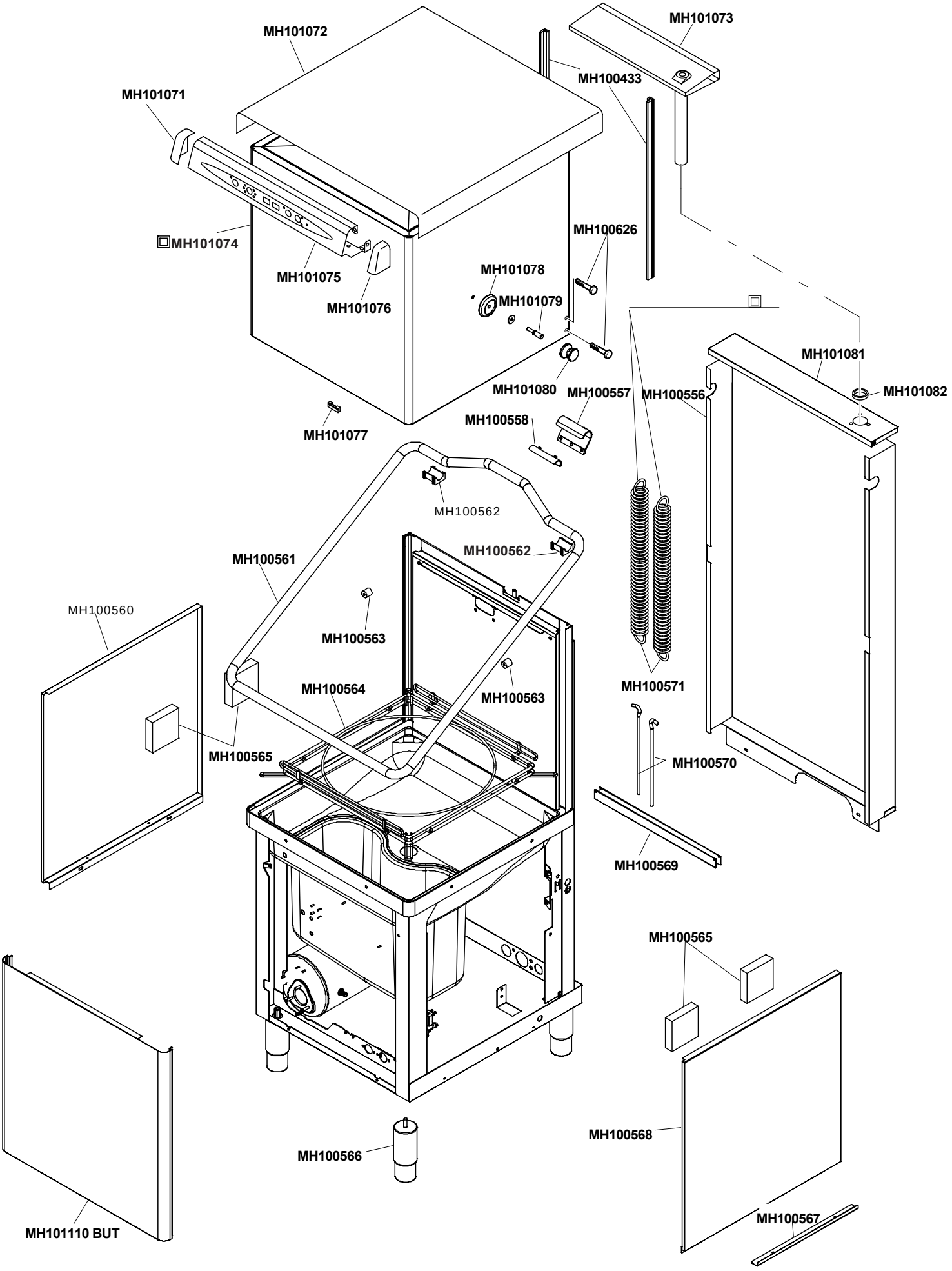
MH101072
MH101073
MH100433
MH101071
MH101074
MH100626
MH101075
MH101078
MH101076
MH101079
MH101081
MH101080
MH100557
MH100556
MH101082
MH100558
MH101077
MH100562
MH100562
MH100561
MH100560
MH100563
MH100564
MH100563
MH100571
MH100565
MH100570
MH100569
MH100565
MH100568
MH100566
MH100567
MH101110 BUT

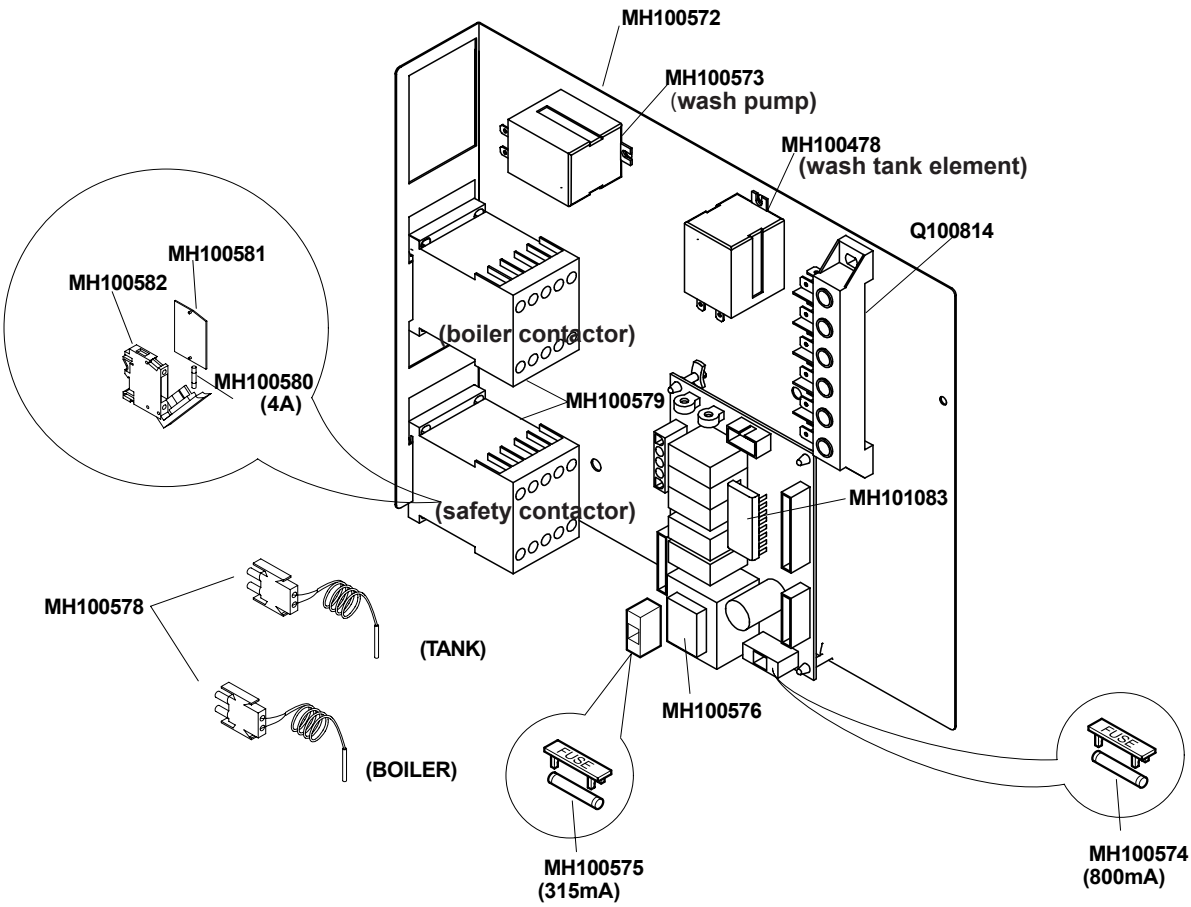
MH100572
MH100573
(wash pump)
MH100478
(wash tank element)
Q100814
MH100581
MH100582
(boiler contactor)
MH100580
(4A)
MH100579
(safety contactor)
MH101083
MH100578
(TANK)
(BOILER)
MH100576
FUSE
MH100575
(315mA)
MH100574
(800mA)

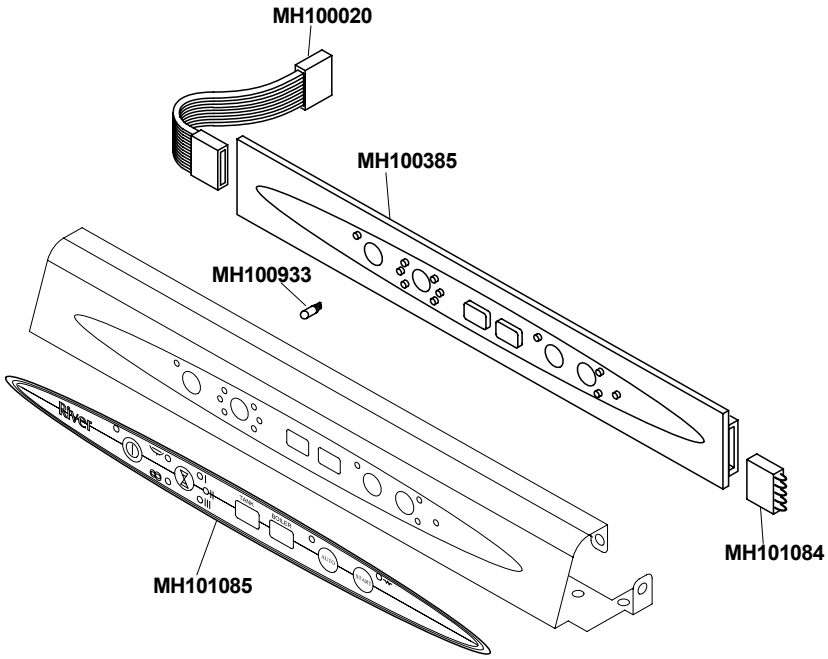
MH100020
MH100385
MH100933
MH101084
MH101085

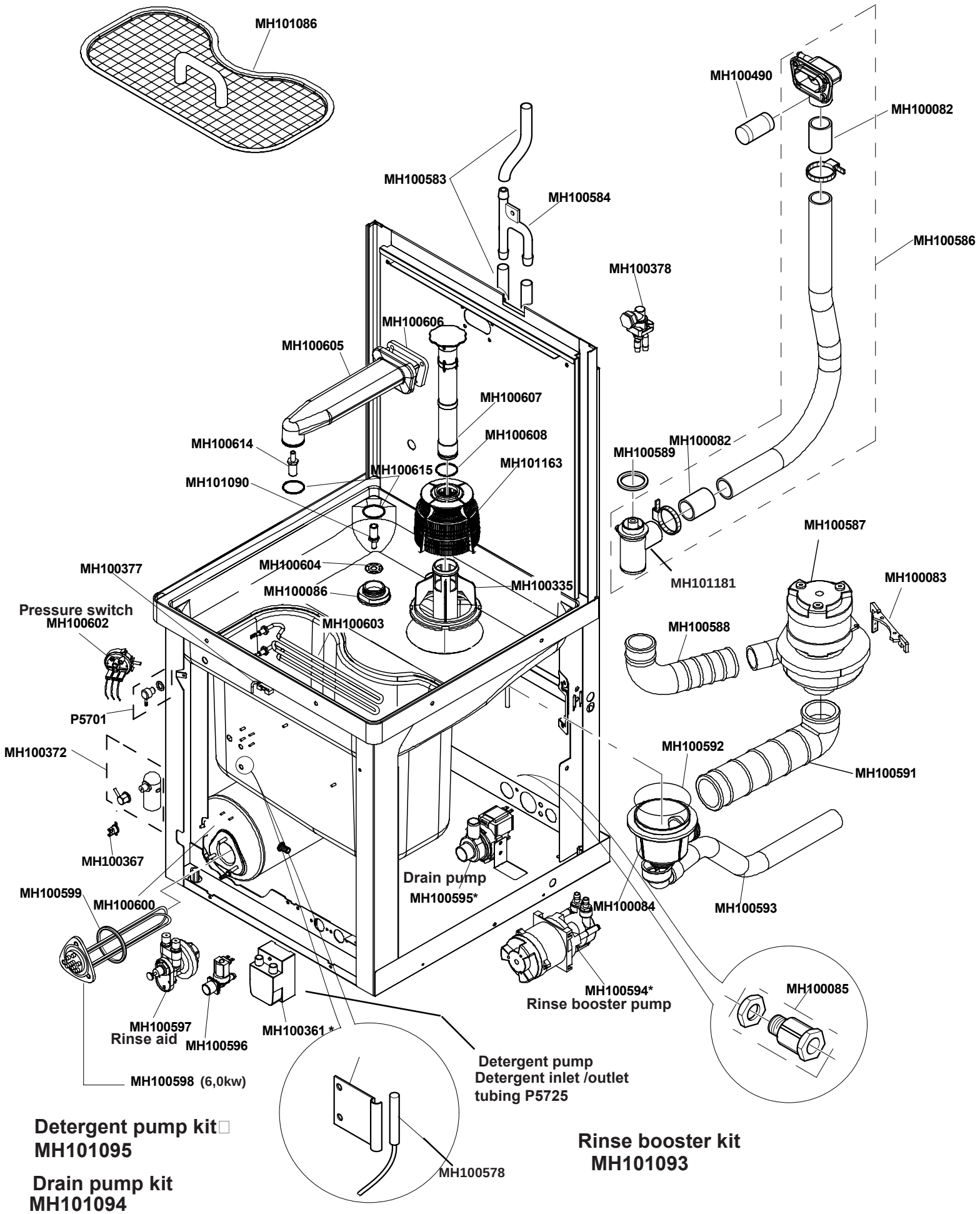
MH101086
MH100490
MH100082
MH100583
MH100584
MH100586
MH100378
MH100606
MH100605
MH100607
MH100608
MH100614
MH100082
MH100589
MH100615
MH101163
MH101090
MH100587
MH100604
MH100377
MH100086
MH100335
MH101181
MH100083
Pressure switch
MH100602
MH100603
MH100588
P5701
MH100372
MH100592
MH100591
MH100367
Drain pump
MH100595*
MH100599
MH100600
MH100084
MH100593
MH100594*
Rinse booster pump
MH100085
MH100597
Rinse aid
MH100596
MH100361 *
Detergent pump
Detergent inlet /outlet
tubing P5725
MH100598 (6,0kw)
MH100578
Detergent pump kit
MH101095
Drain pump kit
MH101094
Rinse booster kit
MH101093

(*) Optional

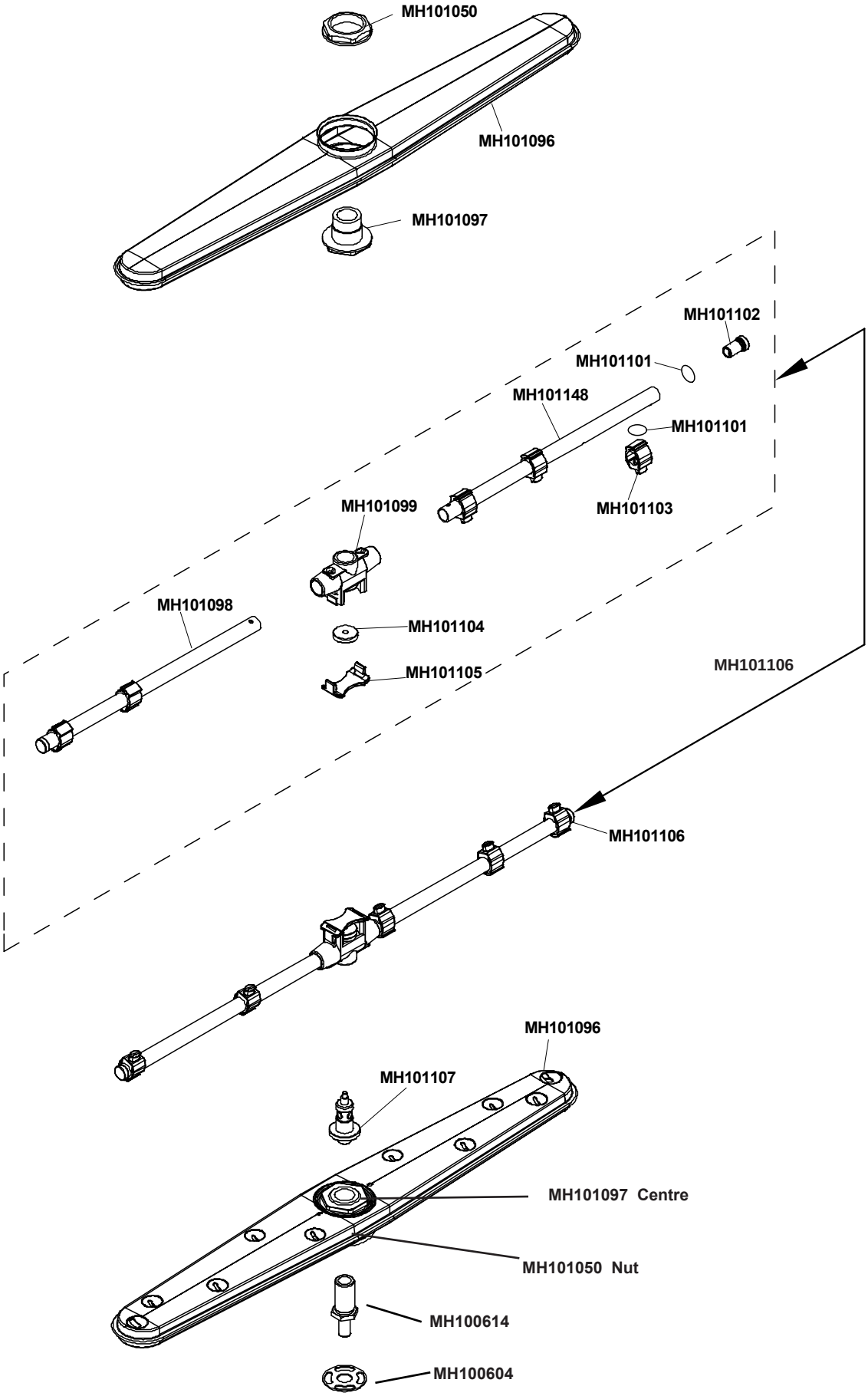
MH101050
MH101096
MH101097
MH101102
MH101101
MH101148
MH101101
MH101103
MH101099
MH101098
MH101104
MH101105
MH101106
MH101106
MH101096
MH101107
MH101097 Centre
MH101050 Nut
MH100614
MH100604

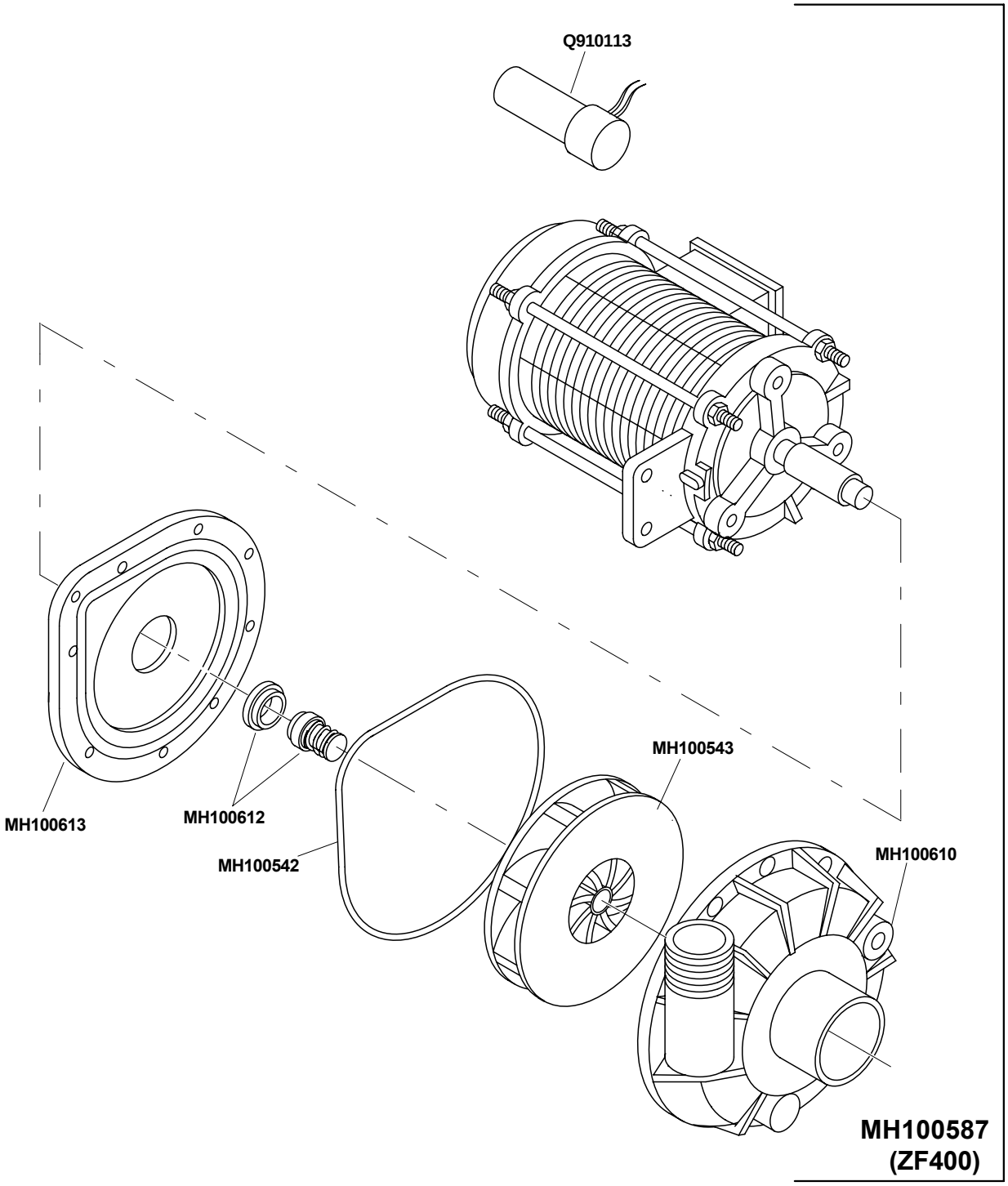
Q910113
MH100543
MH100613
MH100612
MH100542
MH100610
MH100587
(ZF400)